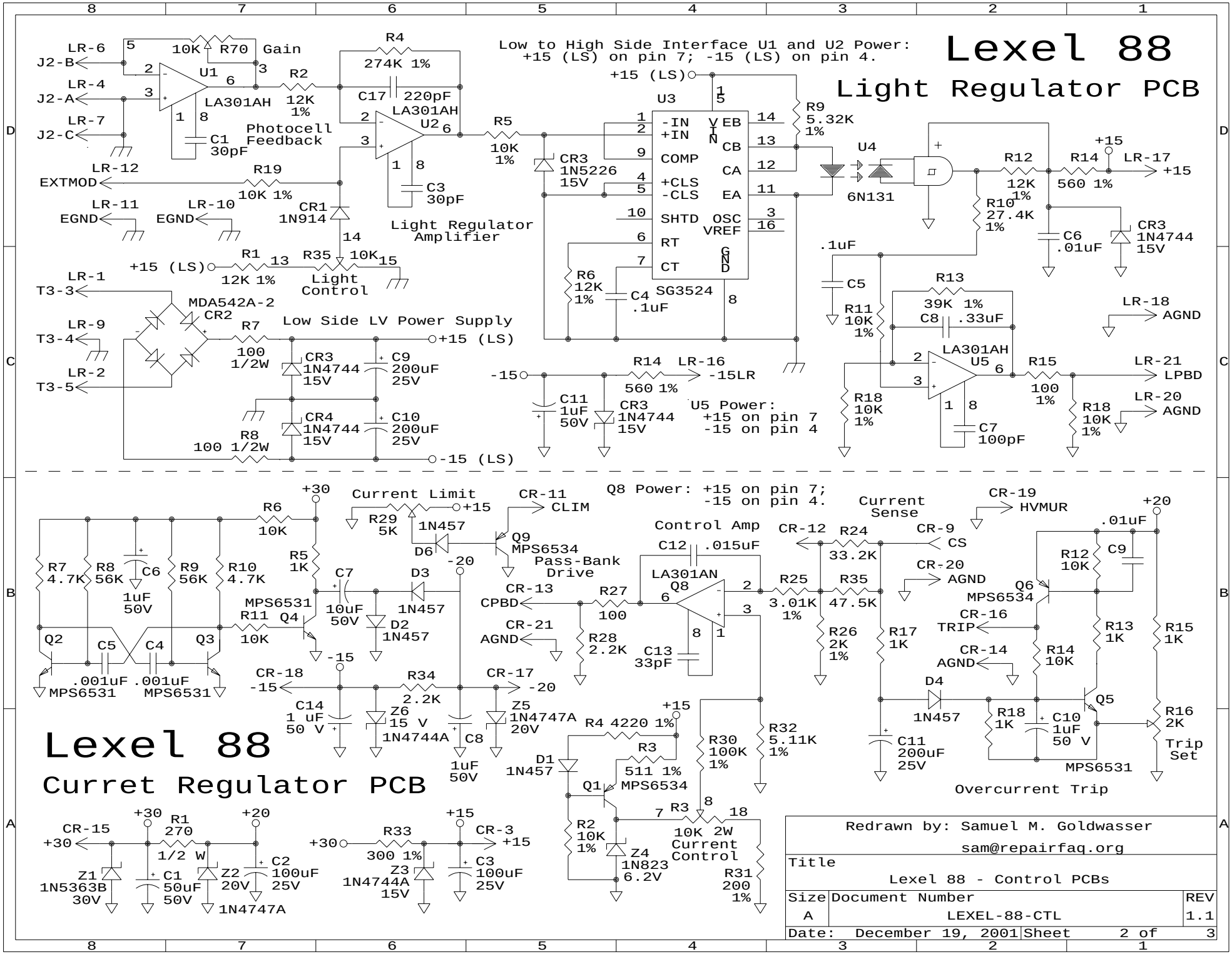
Lexel 88
Light Regulator PCB
Low to High Side Interface U1 and U2 Power:
+15 (LS) on pin 7; -15 (LS) on pin 4.
LR-6
J2-B
LR-4
J2-A
LR-7
J2-C
10K
R70
Gain
U1
LA301AH
R2
12K
1%
C1
30pF
Photocell
Feedback
R4
274K 1%
C17
220pF
LA301AH
U2
C3
30pF
Light Regulator
Amplifier
LR-12
EXTMOD
R19
10K 1%
LR-11
EGND
LR-10
EGND
CR1
1N914
R1
12K 1%
R35
10K
Light
Control
+15 (LS)
LR-1
T3-3
LR-9
T3-4
LR-2
T3-5
MDA542A-2
CR2
R7
100
1/2W
Low Side LV Power Supply
CR3
1N4744
15V
C9
200uF
25V
CR4
1N4744
15V
C10
200uF
25V
R8
100 1/2W
+15 (LS)
-15 (LS)
R5
10K
1%
CR3
1N5226
15V
U3
SG3524
-IN
+IN
COMP
+CLS
-CLS
SHTD
RT
CT
VEB
VIN
CB
CA
EA
OSC
VREF
GND
R6
12K
1%
C4
.1uF
R9
5.32K
1%
U4
6N131
R12
12K
1%
R14
560 1%
LR-17
+15
R10
27.4K
1%
C6
.01uF
CR3
1N4744
15V
.1uF
C5
R11
10K
1%
R13
39K 1%
C8
.33uF
LR-18
AGND
LA301AH
U5
R15
100
1%
LR-21
LPBD
LR-20
AGND
R18
10K
1%
C7
100pF
R14
560 1%
LR-16
-15LR
-15
C11
1uF
50V
CR3
1N4744
15V
U5 Power:
+15 on pin 7
-15 on pin 4
Q8 Power: +15 on pin 7;
-15 on pin 4.
+30
R6
10K
R7
4.7K
R8
56K
C6
1uF
50V
R9
56K
R10
4.7K
R5
1K
MPS6531
Q4
R11
10K
Q2
Q3
C5
C4
.001uF
.001uF
MPS6531
MPS6531
Current Limit
R29
5K
1N457
D6
CR-11
CLIM
Q9
MPS6534
Pass-Bank
Drive
C7
10uF
50V
D3
1N457
D2
1N457
-20
-15
CR-13
CPBD
CR-21
AGND
R27
100
R28
2.2K
Control Amp
C12
.015uF
LA301AN
Q8
C13
33pF
CR-12
R24
33.2K
CR-9
CS
R25
3.01K
1%
R35
47.5K
CR-20
AGND
R26
2K
1%
R17
1K
Current
Sense
CR-19
HVMUR
+20
.01uF
C9
R12
10K
Q6
MPS6534
CR-16
TRIP
CR-14
AGND
R13
1K
R14
10K
R15
1K
D4
1N457
R18
1K
C10
1uF
50 V
Q5
MPS6531
R16
2K
Trip
Set
Overcurrent Trip
C11
200uF
25V
CR-18
-15
R34
2.2K
CR-17
-20
C14
1 uF
50 V
Z6
15 V
1N4744A
C8
1uF
50V
Z5
1N4747A
20V
R4 4220 1%
+15
R3
511 1%
D1
1N457
Q1
MPS6534
R2
10K
1%
Z4
1N823
6.2V
R30
100K
1%
R32
5.11K
1%
R3
10K 2W
Current
Control
R31
200
1%
Lexel 88
Curret Regulator PCB
CR-15
+30
+30
R1
270
1/2 W
+20
Z1
1N5363B
30V
C1
50uF
50V
Z2
20V
1N4747A
C2
100uF
25V
+30
R33
300 1%
+15
CR-3
+15
Z3
1N4744A
15V
C3
100uF
25V
Redrawn by: Samuel M. Goldwasser
sam@repairfaq.org
Title
Lexel 88 - Control PCBs
Size
A
Document Number
LEXEL-88-CTL
REV
1.1
Date: December 19, 2001
Sheet 2 of 3